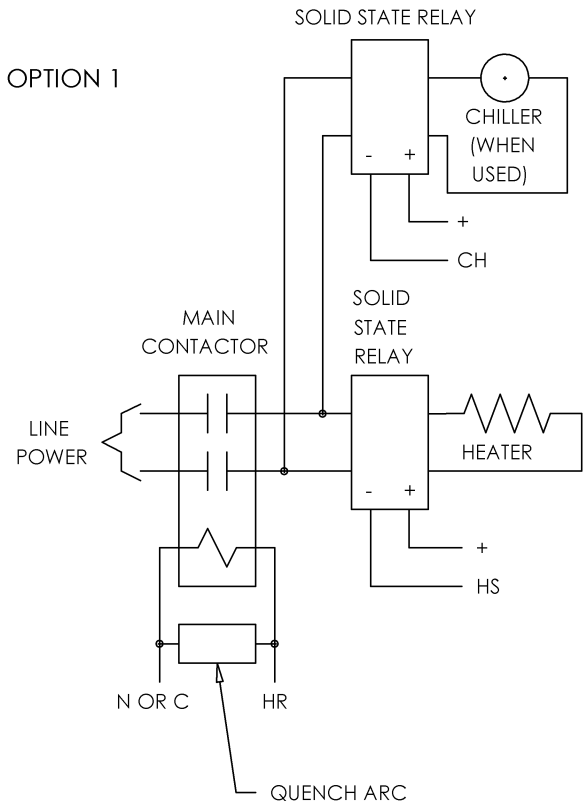

NOTE:
WE RECOMMEND THE USE OF A QUENCH ARC ON EVERY MECHANICAL RELAY AND SOLENOID IN THE SYSTEM. USE PAKTRON P/N 104M06QC100 OR EQUIVALENT.

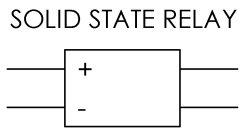

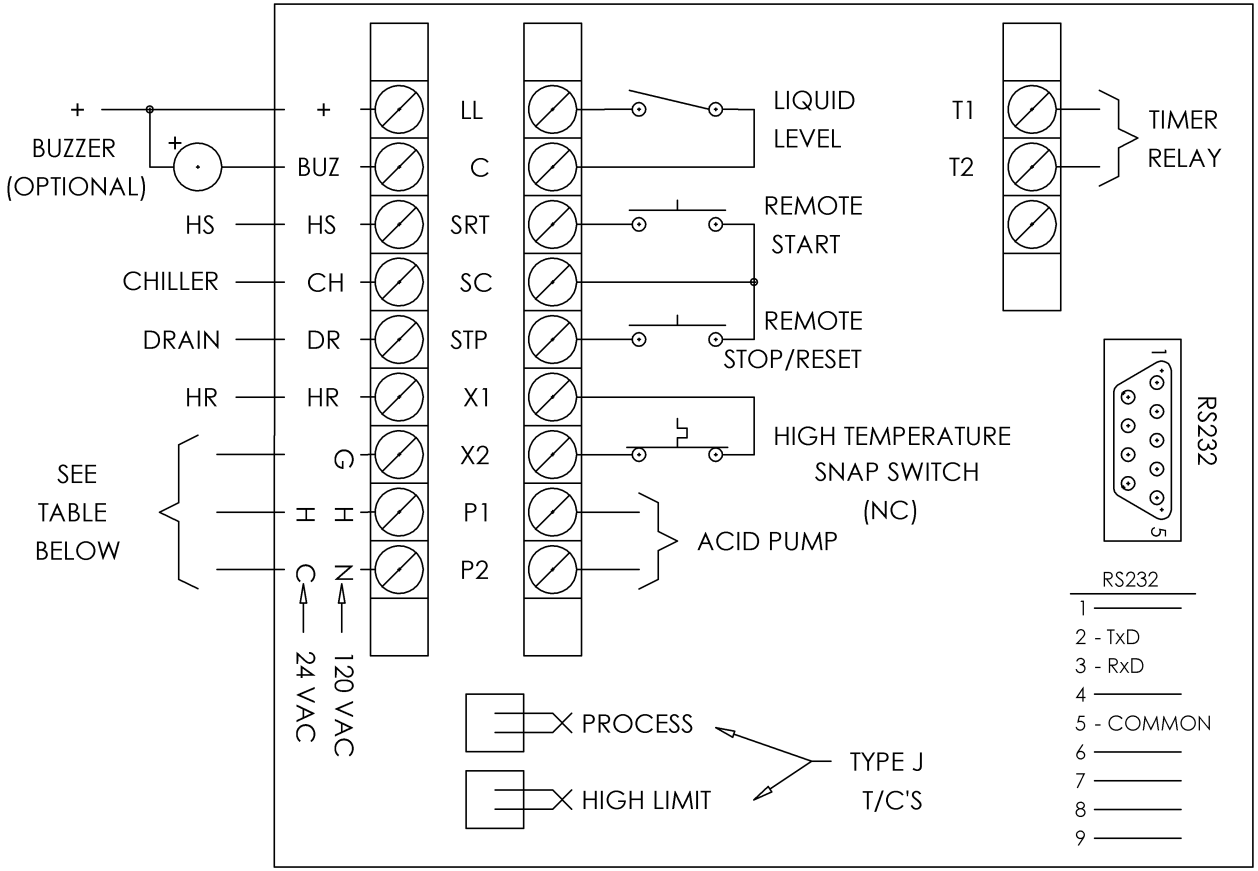

MODEL	VOLTAGE
900SA/RS232	24 VAC
900SB/RS232	120 VAC

NOTES:
1. LIQUID LEVEL ALARMS ON OPEN CONDITION.
2. + TERMINAL RATED 12 - 20 VDC UNREGULATED (100mA).

TOLERANCES UNLESS OTHERWISE SPECIFIED

ALL DIMENSIONS ARE IN INCHES

PATH = E:\CC\DT900\900SB11.SLDDRW

JPC CONTROLS
102 COMPASS PT. DR. STE. D, ST. CHARLES, MO 63301
(636) 946-3300 Fax (636) 724-2492 www.jpccontrols.com

PROCON 900SA/RS232 AND 900SB/RS232 CONTROLLER
REAR PANEL

APPROVAL		DWN BY MPJ	DATE 5/4/00	SCALE NONE	CHKD BY	
ENG	DATE	SHEET 1 OF 1	13	090062	10	01
QA	DATE					